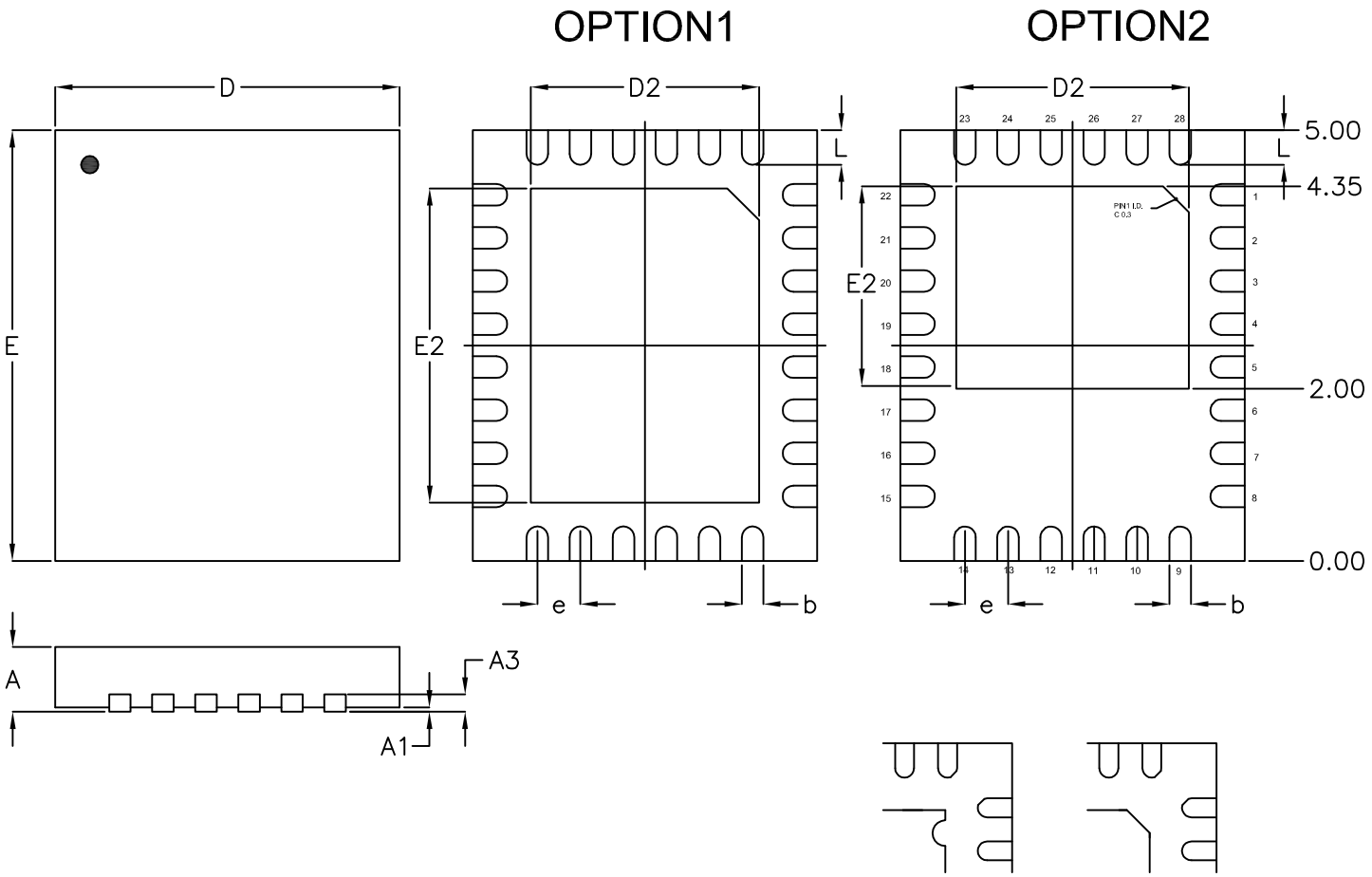

DETAILA
Pin #1 ID and Tie Bar Mark Options

Note : The configuration of the Pin #1 identifier is optional, but must be located within the zone indicated.

Symbol		Dimensions In Millimeters		Dimensions In Inches	
		Min	Max	Min	Max
A		0.700	0.800	0.028	0.031
A1		0.000	0.050	0.000	0.002
A3		0.175	0.250	0.007	0.010
b		0.180	0.300	0.007	0.012
D		3.900	4.100	0.154	0.161
D2	Option1	2.600	2.700	0.102	0.106
	Option2	2.650	2.750	0.104	0.108
E		4.900	5.100	0.193	0.201
E2	Option1	3.600	3.700	0.142	0.146
	Option2	2.300	2.400	0.091	0.094
e		0.500		0.020	
L		0.350	0.450	0.014	0.018

RICHTEK
立錡科技股份有限公司

SCALE: 8:1

DWG TITLE: PACKAGE OUTLINE DRAWING

WQFN4x5-28