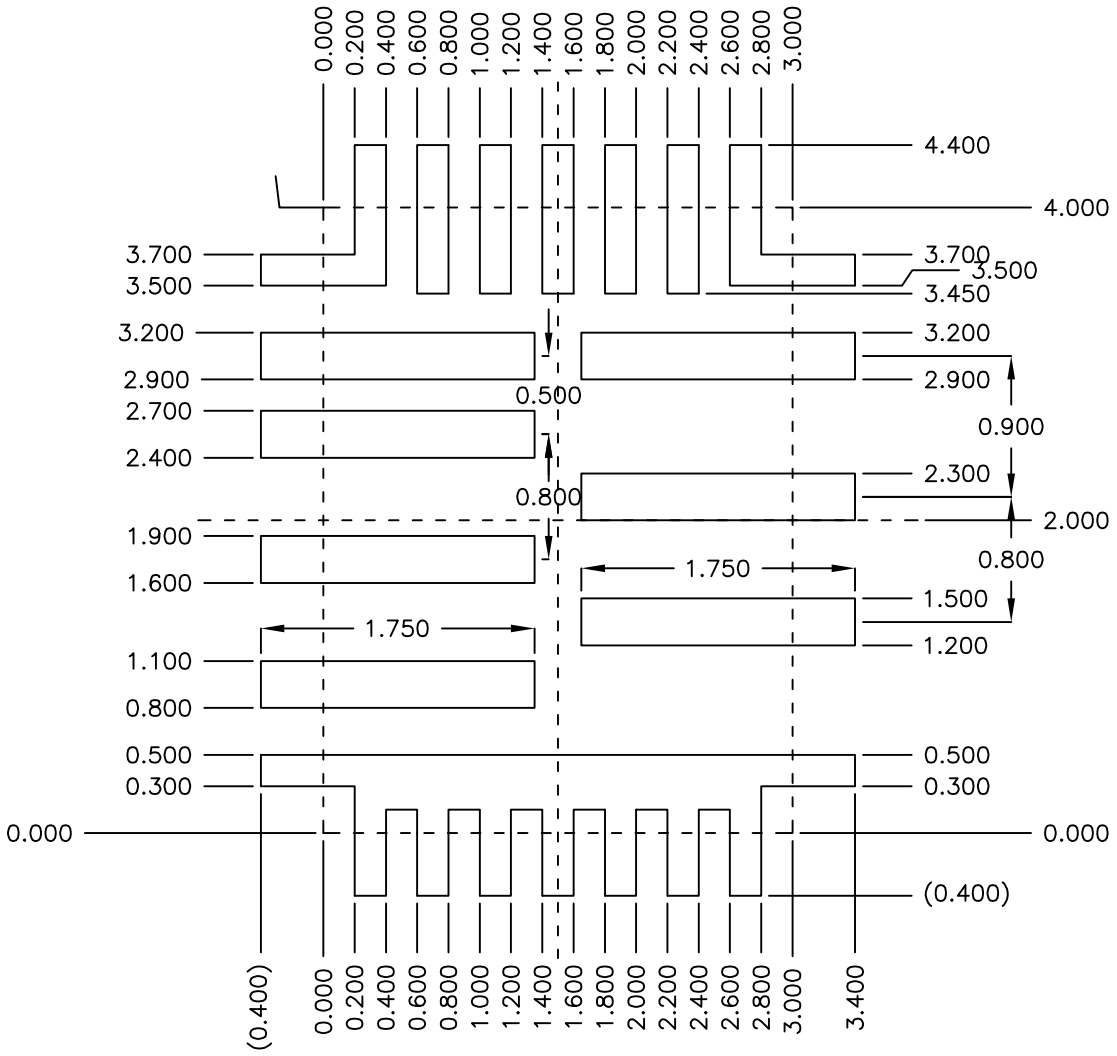

Package	Number of Pin	Tolerance
V/W/U/XQFN3x4-21(FC)	21	±0.05

RICHTEK
立錡科技股份有限公司

SCALE: 20:1

DWG TITLE: FOOTPRINTS DRAWING

V/W/U/XQFN3x4-21(FC)